Wood Duck, Hooded Merganser, and Common Goldeneye Nest Box

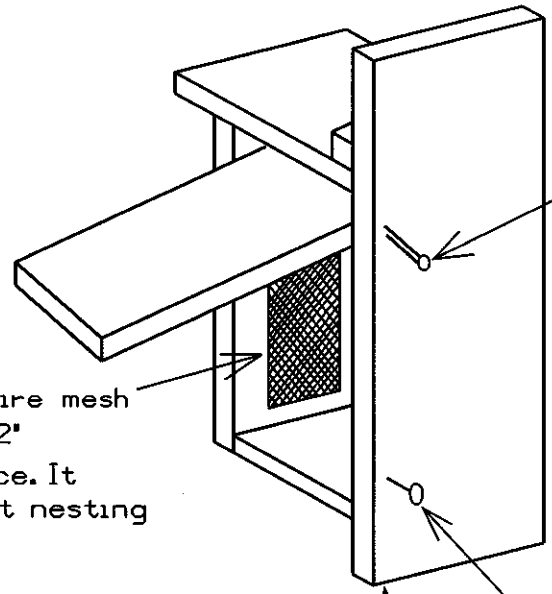

Place rear hinge nail 3½" down from top edge. Use a square to align rear hinge nail with front hinge nail.

1/4" wire mesh 4" x 12"

(Installed below entrance. It allows ducklings to exit nesting box easier.)

Anchor nails front and back to facilitate cleaning

Note: Length of backpiece is 30".

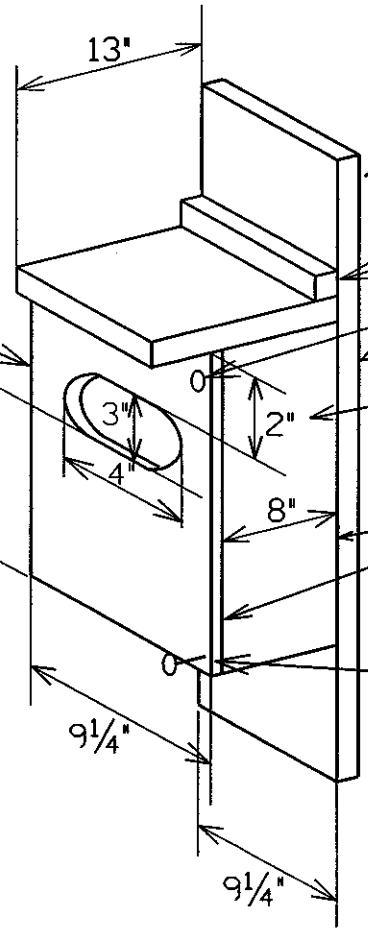

1" X 1" Cleat

Side wall 8" wide

Front & rear nail hinge

7⅞" wide after trimming ⅛" off back edge for door only

1/16" gaps

Anchor nails front and back (Installed to facilitate cleaning of old nesting material)

Plan based upon using one 1" x 10" roughcut building material.