Upper Peninsula Power Company

GENERATOR INTERCONNECTION APPLICATION

Category 3 (Combined Application)

For All Projects with Aggregate Generator Output of More Than 150 kW but Less Than or Equal to 550 kW

Also Serves as Application for Customer Owned Distributed Generation
(Category 3 Only Available to Methane Digester Projects)

ELECTRIC UTILITY CONTACT INFORMATION	FOR OFFICE USE ONLY
Upper Peninsula Power Company ATTN: Dave Puskala 500 N Washington Street Ishpeming, MI 49849 (906) 485 - 2427 dpuskala@uppco.com	Application Number Date and Time Application Received

CUSTOMER / ACCOUNT INFORMATION

Electric Utility Customer Information (As shown on utility bill)

Customer Name (Last, First, Middle)	Customer Mailing Address
Customer Phone Number	Customer E-mail Address (Optional)
Electric Service Account #	Electric Service Meter Number
Are you applying for the Distributed Generation Program? ☐ Yes ☐ No	**Are you interested in selling Renewable Energy Credits (REC's)?** ☐ Yes ☐ No

Do you have an Alternative Electric Supplier?
☐ Yes ☐ No If Yes, Name _____

Notes: Enter name ONLY if your energy is supplied by a 3rd party, not the utility.
You must apply to both the Distribution Utility and your Alternate Energy Provider (if applicable) for Customer Owned Distributed Generation.

GENERATION SYSTEM SITE INFORMATION

Physical Site Service Address (If Not Billing Address)

Annual Site Requirements Without Generation in kWh	Peak Annual Site Demand in kW (only for customers billed on Demand Rates)	Attached Site Plan
kWh/year	kW	Page # _____

Attached Electrical One-Line Drawing
Page # _____

(Per MPSC Order in Case No. U-15787 – The One-Line Drawing must be signed and sealed by a licensed professional engineer, licensed in the State of Michigan or by an electrical contractor licensed by the State of Michigan with the electrical contractor's license number noted on the diagram.)

- **See Page 5 for sample Site Plan**
- **See Page 6 for sample of Inverter Generator Electrical One-Line Drawing**
- **See Page 7 for sample of Synchronous Generator Electrical One-Line Drawing**
- **See Page 8 for sample of Induction Generator Electrical One-Line Drawing**

GENERATION SYSTEM MANUFACTURER INFORMATION

System Type (Solar, Wind, Biomass Methane Digester, etc)	Generator Type (Inverter, Induction, Synchronous)
Generator Nameplate Rating kW	Expected Annual Output in Kilowatt Hours kWh/year
A.C. Operating Voltage	Wiring Configuration (Single Phase, Three Phase)

Certified Test Record No. (Testing to Standard UL1741 scope 1.1a)

INVERTER GENERATOR - BASED SYSTEMS

Manufacturer	Model (Name/Number)	Inverter Power Rating (kW) kW

SYNCHRONOUS AND INDUCTION GENERATOR - BASED SYSTEMS
(Must complete either Page 3 or Page 4 and attach Electrical One-Line Drawing)

The following information on these system components shall appear on the Electrical One-Line Drawing:

- **Breakers – Rating, location and normal operating status (open or closed)**
- **Buses – Operating voltage**
- **Capacitors – Size of bank in Kvar**
- **Circuit Switchers – Rating, location and normal operating status (open or closed)**
- **Current Transformers – Overall ratio, connected ratio**
- **Fuses – Normal operating status, rating (Amps), type**
- **Generators – Capacity rating (kVA), location, type, method of grounding**
- **Grounding Resistors – Size (ohms), current (Amps)**
- **Isolating Transformers – Capacity rating (kVA), location, impedance, voltage ratings, primary and secondary connections and method of grounding**
- **Potential Transformers – Ratio, connection**
- **Reactors – Ohms/phase**
- **Relays – Types, quantity, IEEE device number, operator lines indicating the device initiated by the relays**
- **Switches – Location and normal operating status (open or closed), type, rating**
- **Tagging Point – Location, identification**

Manufacturer	Model Name	Model Number

INSTALLATION INFORMATION
Project Single Point of Contact: (Electric Utility Customer, Developer or Other)

Name	Company (If Applicable)	Phone Number
E-Mail Address		Requested in Service Date
Licensed Contractor(Name of Firm or Self)		
Contractor's Name (Last, First, MI)	Contractor's Phone #	Contractor's E-mail

CUSTOMER AND PROJECT DEVELOPER/CONTRACTOR SIGNATURES AND FEES

☐ **Attached $150 Interconnection Application Fee OR**

☐ **Attached $125 combined Interconnection and Customer Owned Distributed Generation Application Fee COMBINED** (Includes $75 Interconnection Application fee along with $50 Application Fee for Customer Owned Distributed Generation)

☐ Check #_____ ☐ Money Order # _____

Sign and Return Completed Application with Application Fee to Electric Utility Contact (at top of page 1).

To the best of my knowledge, all the information provided in this application form is complete and correct.

Customer Signature: _____ Date _____

Project Developer/Contractor Signature (if applicable): _____ Date _____

Note: Refer to the applicable "Michigan Electric Utility Generator Interconnection Requirements" for a detailed explanation of the Interconnection Process, Fees, Timelines, and Technical Requirements.

SYNCHRONOUS GENERATORS	
GENERATOR INFORMATION	
Generator Nameplate Voltage	Generator Nameplate Watts or Volt-Amperes
Generator Nameplate Power Factor (pf)	RPM
TECHNICAL INFORMATION	
Minimum and Maximum Acceptable Terminal Voltage	Direct Axis Reactance (saturated)
Direct Axis Reactance (unsaturated)	Quadrature Axis Reactance (unsaturated)
Direct Axis Transient Reactance (saturated)	Direct Axis Transient Reactance (unsaturated)
Quadrature Axis Transient Reactance (unsaturated)	Direct Axis Sub-Transient Reactance (saturated)
Direct Axis Sub-Transient Reactance (unsaturated)	Leakage Reactance
Direct Axis Transient Open Circuit Time Constant	Quadrature Axis Transient Open Circuit Time Constant
Direct Axis Sub-Transient Open Circuit Time Constant	Quadrature Axis Sub-Transient Open Circuit Time Constant
Open Circuit Saturation Curve	
Reactive Capability Curve Showing Overexcited and Underexcited Limits (Reactive Information if Non-Synchronous)	
Excitation System Block Diagram with Values for Gains and Time Constants (Laplace Transforms)	
Short Circuit Current Contribution From Generator at the Point of Common Coupling	
Rotating Inertia of Overall Combination Generator, Prime Mover, Couplers and Gear Drives	
Station Power Load When Generator is Off-Line, Watts, pf	Station Power Load During Start-Up, Watts, pf
Station Power Load During Operation, Watts, pf	

INDUCTION GENERATORS	
GENERATOR INFORMATION	
Generator Nameplate Voltage	Generator Nameplate Watts or Volt-Amperes
Generator Nameplate Power Factor (pf)	RPM
TECHNICAL INFORMATION	
Synchronous Rotational Speed	Rotation Speed at Rated Power
Slip at Rated Power	Minimum and Maximum Acceptable Terminal Voltage
Motoring Power (kW)	Neutral Grounding Resistor (If Applicable)
I2 2t or K (Heating Time Constant)	Rotor Resistance
Stator Resistance	Stator Reactance
Rotor Reactance	Magnetizing Reactance
Short Circuit Reactance	Exciting Current
Temperature Rise	Frame Size
Design Letter	Reactive Power Required in Vars (No Load)
Reactive Power Required in Vars (Full Load)	
Short Circuit Current Contribution from Generator at the Point of Common Coupling	
Rotating Inertia, H in Per Unit on kVA Base, of Overall Combination Generator, Prime Mover, Couplers and Gear Drives	
Station Power Load When Generator is Off-Line, Watts, pf	Station Power Load During Start-Up, Watts, pf
Station Power Load During Operation, Watts, pf	

SAMPLE SITE PLAN – PROVIDED FOR REFERENCE ONLY

SITE PLAN
Applicant
Address
City/Town
Signature

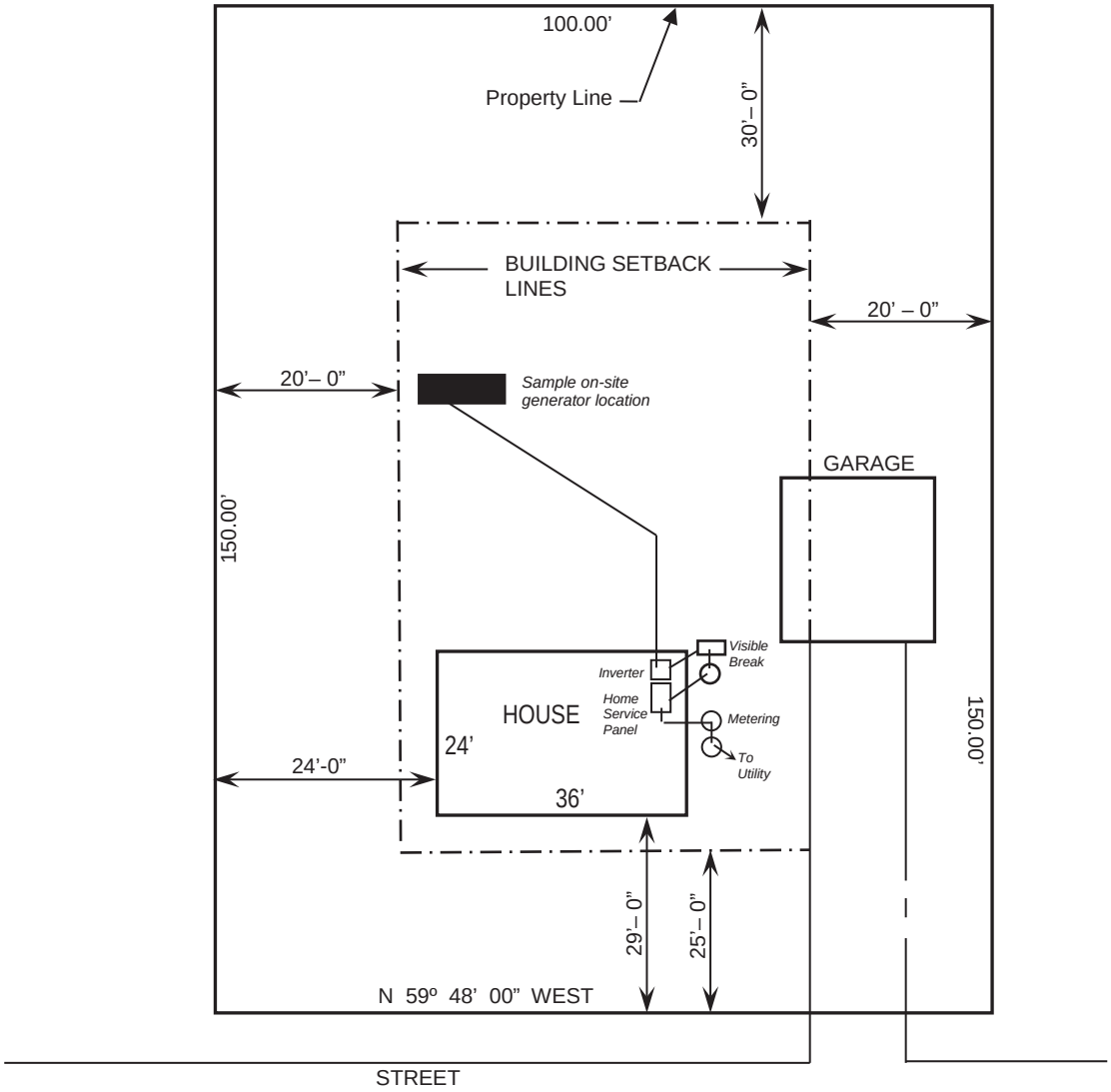

Weblink to State of Michigan / Plats:

http://www.cis.state.mi.us/platmaps/sr_subs.asp

Legible hand drawn site plans are acceptable

SAMPLE ONE-LINE DRAWING – PROVIDED FOR REFERENCE ONLY

INVERTER GENERATOR
UL 1741 SCOPE 1.1A COMPLIANT

ONE–LINE DRAWING
Licensed PE/Contractor
PE/Contractor License Number
PE/Contractor Address
PE/Contractor Signature

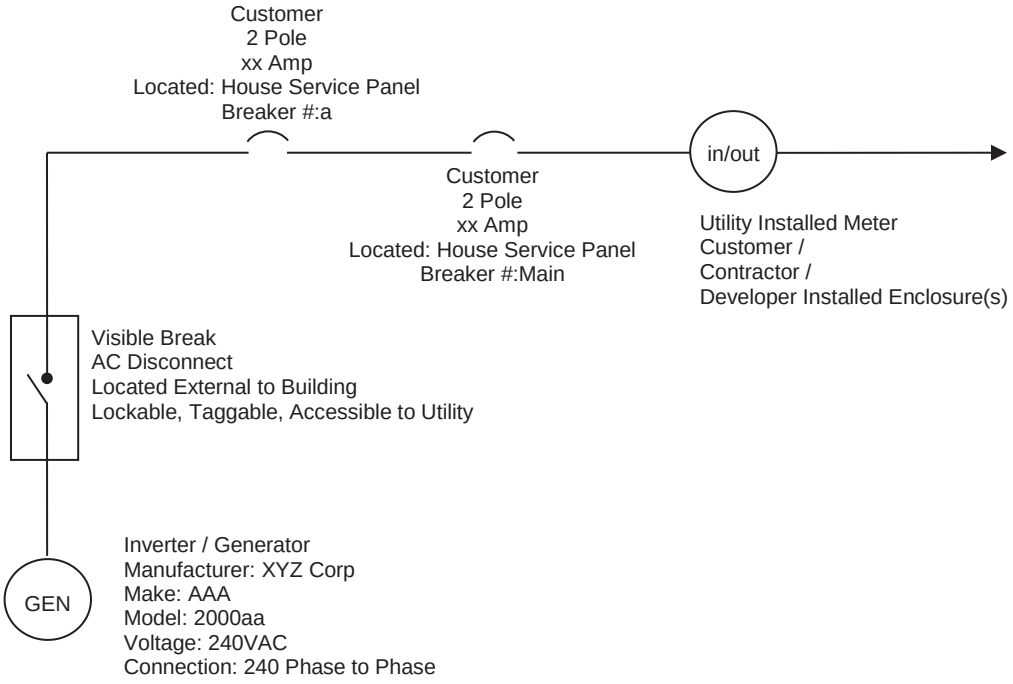

Legible Hand Drawn One-Line is Acceptable

SAMPLE ELECTRICAL ONE-LINE DRAWING – PROVIDED FOR REFERENCE ONLY
TYPICAL ISOLATION AND FAULT PROTECTION FOR SYNCHRONOUS GENERATOR

ONE–LINE DRAWING	
Licensed PE/Contractor	PE/Contractor License Number
PE/Contractor Address	PE/Contractor Signature

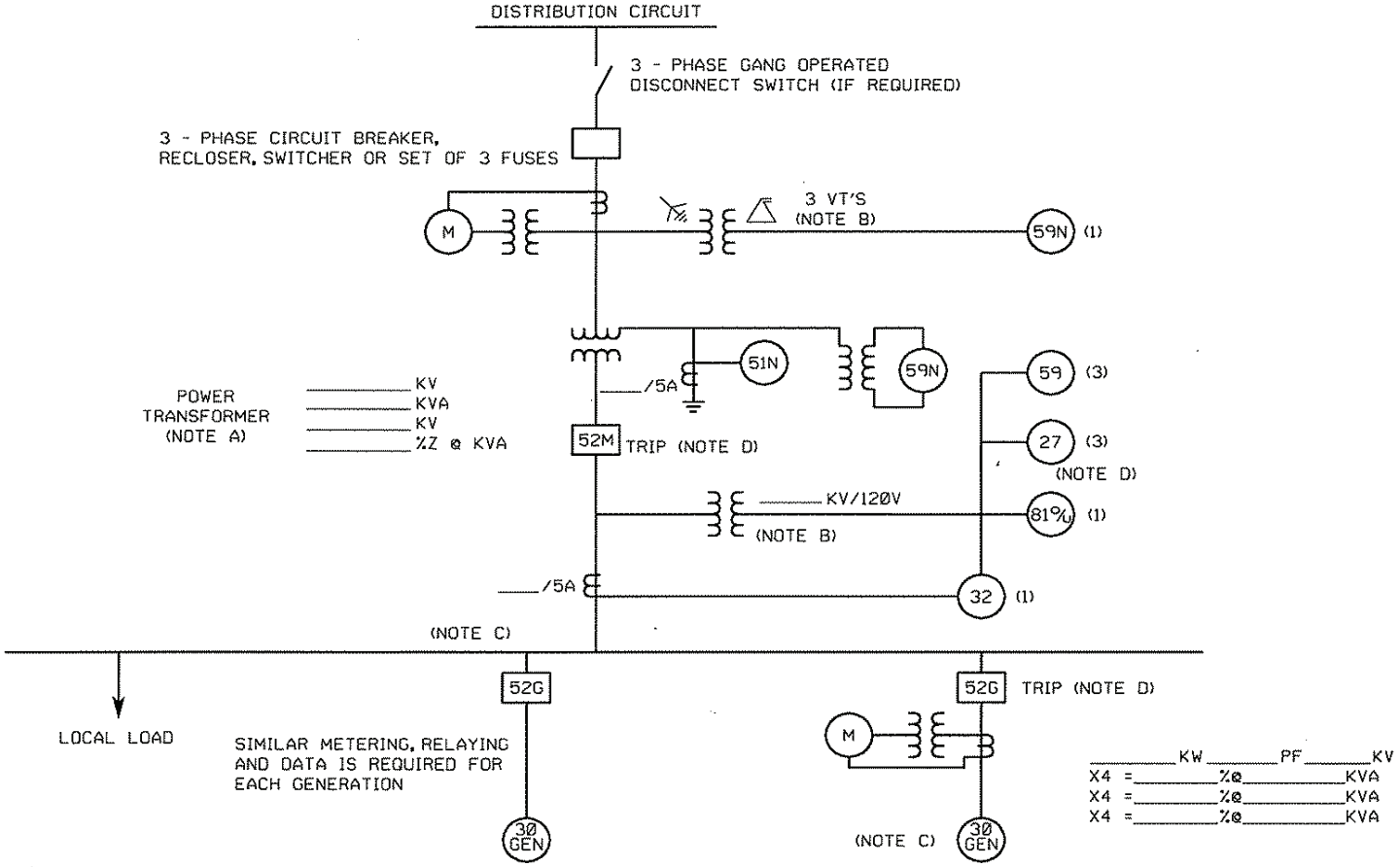

LEGEND

27 Undervoltage
32 Reverse Power (Not Required for Flow-Back)
51N Neutral overcurrent (required for grounded secondary)
59 Overvoltage
59N Zero sequence overvoltage (assuming ungrounded secondary on power transformer)
81o/u Over/Underfrequency

NOTES

A) See technical requirements for permissible connection configurations and protection. Transformer connections proposed shall be shown on the one-line drawing by the Project Developer. Transformer connection and secondary grounding to be approved by Utility.

B) Protection alternatives for the various acceptable transformer connections are shown. Only one protection alternative will ultimately be used, depending on the actual transformer winding connections. VT's for 59, 27, 81o/u and 32 are shown connected on the primary (Project side) of the power transformer, but may instead be connected on the secondary (Utility side). VT's are required on the secondary of the power transformer if a 59N is required for an ungrounded secondary connection. IEEE std 1547 requirements for voltage and frequency must be met at the PCC. IEEE Std. 1547 permits the VT's to be connected at the point of generator connection in certain cases.

C) Main breaker protection, generator protection and synchronizing equipment are not shown.

D) Trip of all 52G breakers or the 52M breaker is acceptable, depending upon whether the Project Developer wants to serve its own isolated load after loss of Utility service.

SAMPLE ELECTRICAL ONE-LINE DRAWING – PROVIDED FOR REFERENCE ONLY
TYPICAL ISOLATION AND FAULT PROTECTION FOR INDUCTION GENERATOR

ONE–LINE DRAWING	
Licensed PE/Contractor	PE/Contractor License Number
PE/Contractor Address	PE/Contractor Signature

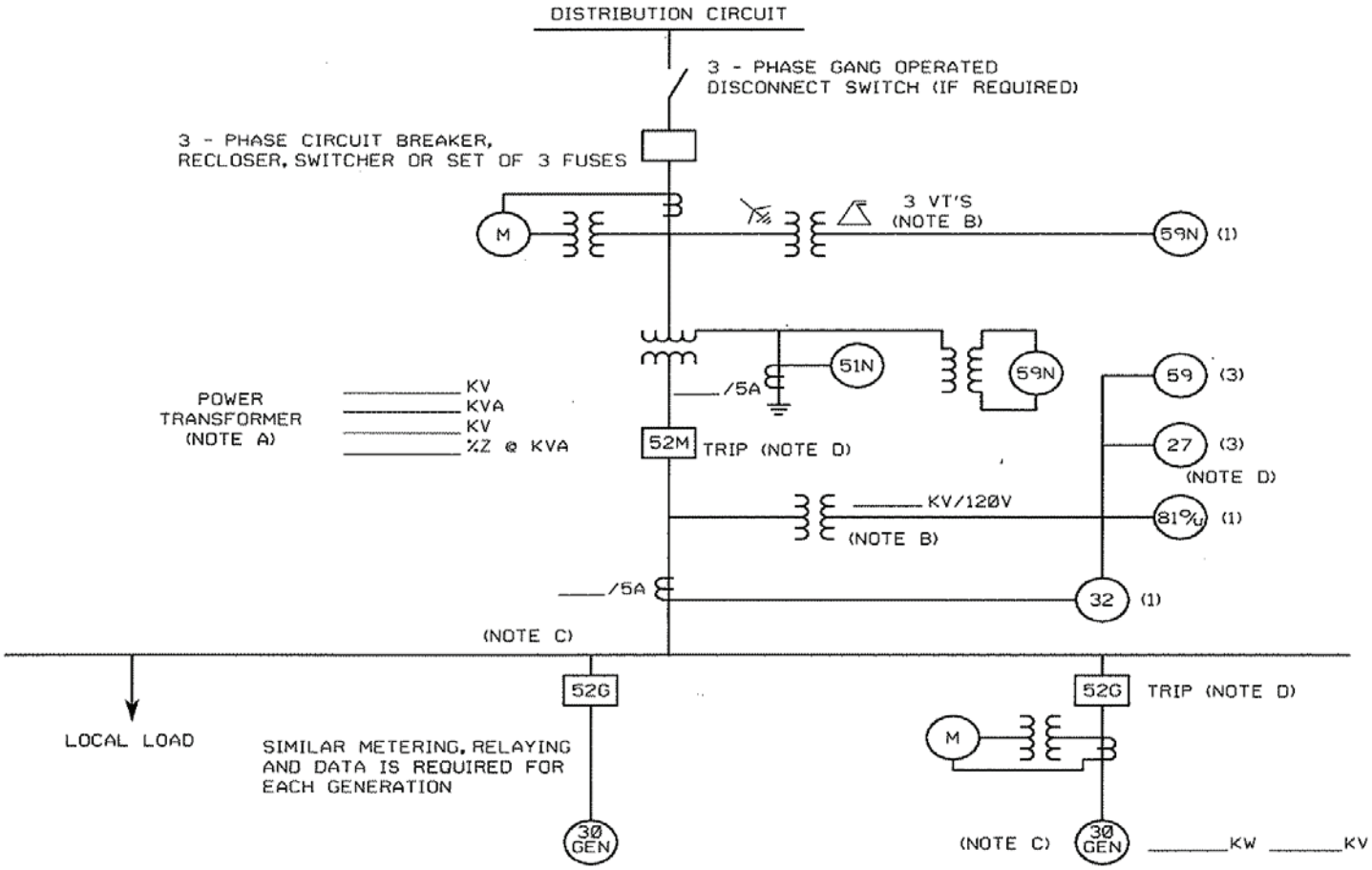

LEGEND

27 Undervoltage
32 Reverse Power (Not Required for Flow-Back)
51N Neutral overcurrent (required for grounded secondary)
59 Overvoltage
59N Zero sequence overvoltage (assuming ungrounded secondary on power transformer)
81o/u Over/Underfrequency

NOTES

A) See technical requirements for permissible connection configurations and protection. Transformer connections proposed shall be shown on the one-line drawing by the Project Developer. Transformer connection and secondary grounding to be approved by Utility.

B) Protection alternatives for the various acceptable transformer connections are shown. Only one protection alternative will ultimately be used, depending on the actual transformer winding connections. VT's for 59, 27, 81o/u and 32 are shown connected on the primary (Project side) of the power transformer, but may instead be connected on the secondary (Utility side). VT's are required on the secondary of the power transformer if a 59N is required for an ungrounded secondary connection. IEEE std 1547 requirements for voltage and frequency must be met at the PCC. IEEE Std. 1547 permits the VT's to be connected at the point of generator connection in certain cases.

C) Main breaker protection, generator protection and synchronizing equipment are not shown.

D) Trip of all 52G breakers or the 52M breaker is acceptable, depending upon whether the Project Developer wants to serve its own isolated load after loss of Utility service.